产品手册

Product Manual

[传动装置的解决方案 / 传动产品的领导品牌]

精密制造　引领未来

Precision manufacturing leads the future

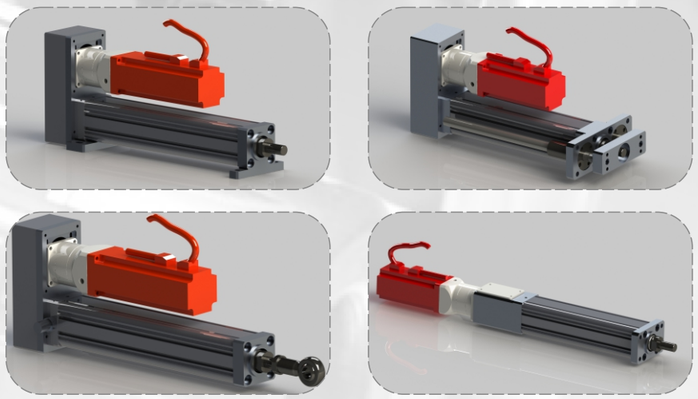

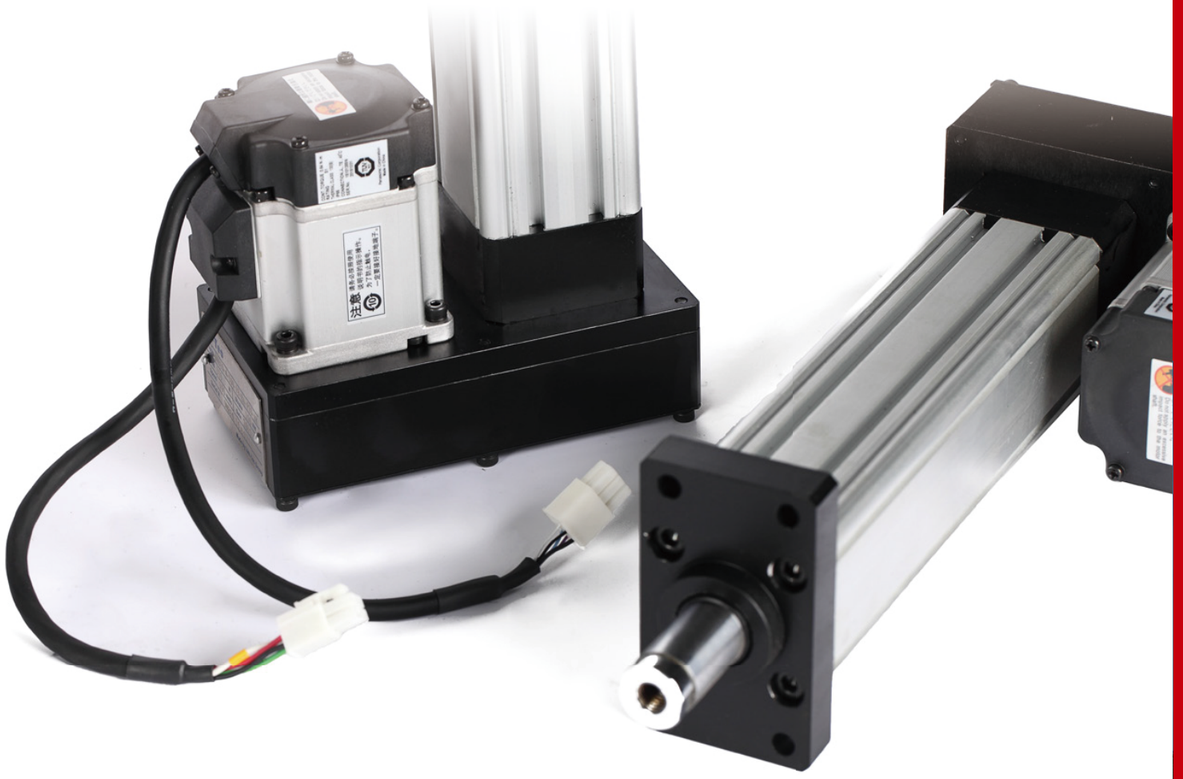

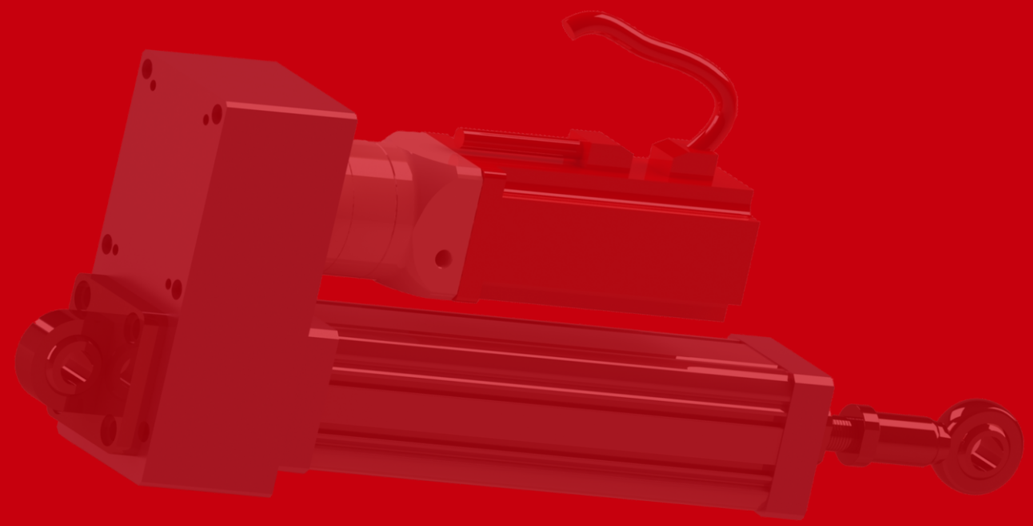

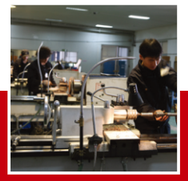

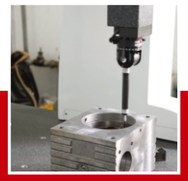

目 录
CATALOG

电缸安装方式(电缸彩图) Installation mode of electric cylinder

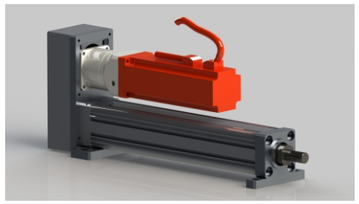
折返式法兰

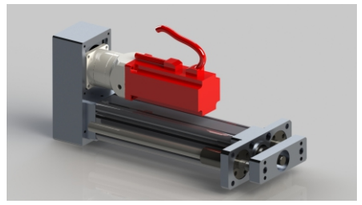
折返式带导杆

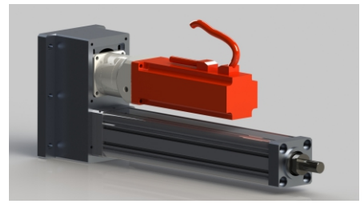
折返式后法兰

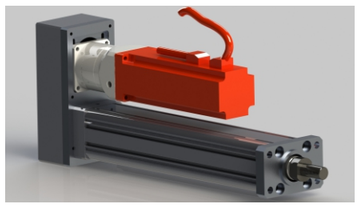
折返式前法兰

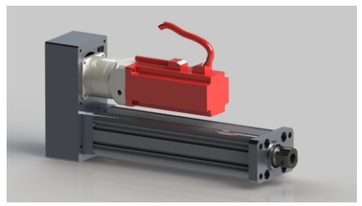
折返式前法兰内螺纹

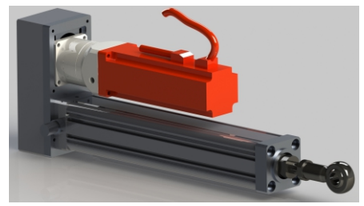
折返式前鱼眼后耳轴

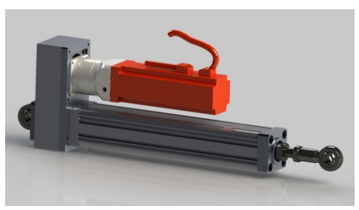
折返式前鱼眼鱼眼底座

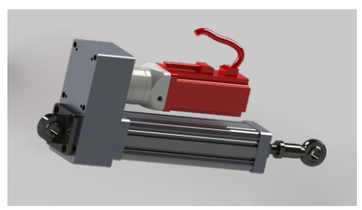
折返式前鱼眼鱼眼底座

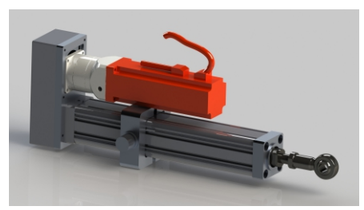
折返式前鱼眼中耳轴

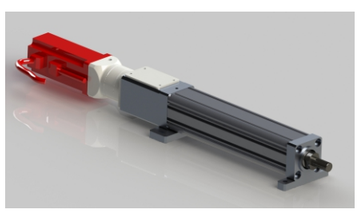
直连式侧法兰

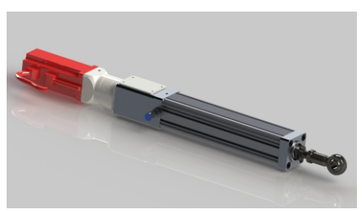
直连式后耳轴

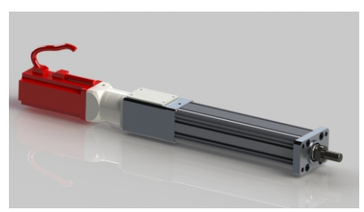
直连式前法兰

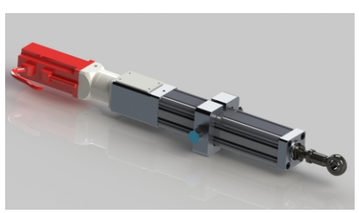
直连式中耳轴

电动缸常用公式 Common formula of electric cylinder

电机扭矩计算公式:
Calculation formula of motor torque

电机扭矩（Nm）=9550*功率（KW）/电机额定转数（r/min）
Motor torque(Nm)=9550*horse power(KW)/electric motor rated speed(r/min)

电缸推力计算：
Formula for calculation of electric cylinder thrust

F=t*η(0.85)*2π*减速比 /L

电动缸额定速度(S)计算：
Calculation of rated speed of electric cylinder

S(mm/s)=R/60*L(mm)/D

电动缸寿命计算
The electric cylinder of life calculation

L10=（C a/Fm ）^3 ×L

F= 电动缸推力Electric cylinder thrust
T=电机额定扭矩Motor rated torque
η=机械效率Mechanical efficiency
π=圆周率 pi
L(mm)=丝杆导程ball screw helical pitch
R=电机额定转速Rated speed of moto
D=减速比reduction ratio
L10:电缸的寿命，单位Km, Service life of electric cylinder, The unit is km
Fm ：电缸承受的平均负载，单位Kn, Average load of electric cylinder, The unit is kn
C a：丝杆螺母的基本额定动负载，单位Kn（可通过丝杆样本查出）
Basic rated dynamic load of screw nut, unit: kn (can be found by screw sample)

电缸

电缸选型参数表 Electric cylinder Selection parameters

缸型 MODEL	推力(KG) LOAD	行程(mm) STROKE LENGTH	速度(mm/s) SPEED	丝杆直径(mm) SCREW DIAMETER	推杆直径(mm) PUSH ROD DIAMETER	输出螺纹头 OUTPUT THREAD HEAD
45#	60	≦200	200	12	22	M12*1.25
65#	350	≦1000	200	16	30	M16*1.5
75#	800	≦1000	200	20	35	M20*1.5
95#	1500	≦1500	200	25	45	M24*1.5
110#	3000	≦1500	200	32	50	M30*2.0
135#	5000	≦2000	200	50	80	M36*2.0
160#	10000	≦2000	200	63	100	M52*2.0
190#	20000	≦2500	200	80	110	M56*2.0
250#	30000	≦3000	200	100	145	M80*2.0

型号命名方式

NMS65 - F5 - 100 - Q - P5 - SF400W - Z - A - T2-NPN/PNP

NMS	65	F	5	100	Q	P5	SF	400	Z	A	T2	NPN/PNP
产品系列 product family	缸体大小型号 Cylinder size and model	马达安装方式 Motor installation mode	丝杆导程 Lead of Ball Screws	行程(mm) Travel distance(mm)	电缸安装方式 Installation mode of electric cylinder	减速比 Reduction ratio	电机品牌 Motor brand	电机功率 Motor power	带刹车：Z Motor brake	前螺纹头 Front thread head	限位开关 Limit switch	限位开关类 Type of limit switch
NMS:中负载系列 NMS:Medium load series	45 65 75	F：折返式 F: Folding	5 10		Q:前法兰 Q: front connection board		SF:赛孚德	100W	Z:带刹车 Z: With brake	A:外螺纹 A: External thread	T2:2条开关 T2:2PCS ordinary type switch	NPN或PNP NPN or PNP
NMH:重负载系列 NMH:Heavy Duty series	95 110 135	L：直连式 L:Straight line	16 20		H:后法兰 H: Rear connection board		P:松下 P: Panasonic	200W	无:无刹车 None: no brake	B:内螺纹 B: Internal thread		无：普通开关 None: ordinary switch
	160 190 250				C:侧法兰 C:side connection board		SM:西门子 SM: Siemens	400W		Y:Y型接头 Y: Y-joint	T3:3条普通开关 T3:3PCS ordinary type switch	
					Y:铰链 (后双耳) Y: Hinge (rear ears)		M:三菱 M: MITSUBISHI	750W		J:关节轴承 J: Spherical plain bearing		
					J:后轴承 J: Rear bearing		Y:安川 Y: YASKAWA	1000W		I:I型接头 I: Type I joint		
					D:后单耳 D: Posterior monaural		T:台达 T: Delta	1500W				
							O:其他 O: Others	.....				
								50000W				

电缸前端安装方式 Front-end installation method of electric cylinder

45缸内螺纹
45Internal thread

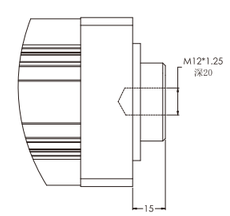

45缸外螺纹
45External thread

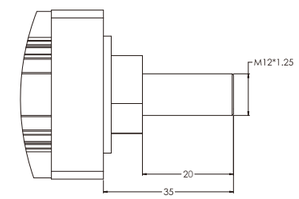

45缸Y型接头.
45Y type joint

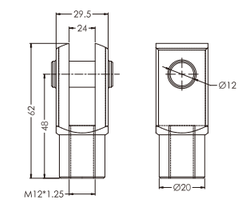

45缸关节轴承
45Joint bearing

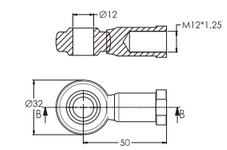

45缸折返式侧法兰
45Folding side flange

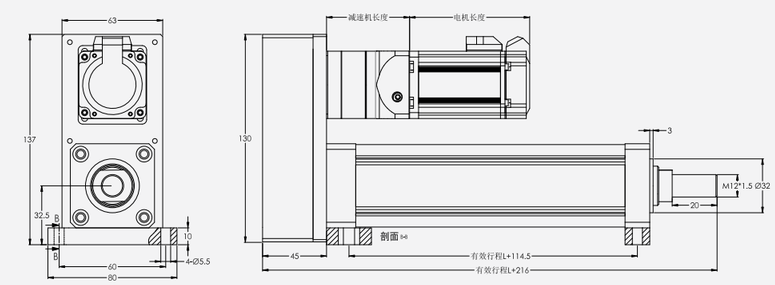

有效行程L(mm) Effective stroke	标准行程 Standard stroke										行程建议(mm) Itinerary suggestion
	100	200	300	400	500	600	700	800	900	1000	≦1000
重量(kg) Weight	2.25	2.60	2.95	3.30	3.65	4	4.35	4.70	5.05	5.40	...
备注：行程每增加100mm重量增加0.35kg Remarks: The weight of 0.35kg will be increased for every 100 mm increase in travel											

45缸折返式后法兰
45Folding rear flange

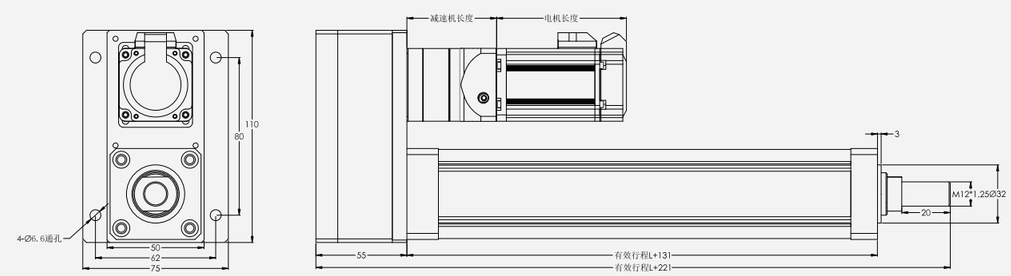

有效行程L(mm) Effective stroke	标准行程 Standard stroke										行程建议(mm) Itinerary suggestion
	100	200	300	400	500	600	700	800	900	1000	≦1000
重量(kg) Weight	2.25	2.60	2.95	3.30	3.65	4	4.35	4.70	5.05	5.40	...
备注：行程每增加100mm重量增加0.35kg Remarks: The weight of 0.35kg will be increased for every 100 mm increase in travel											

45缸折返式前法兰
45Folding front flange

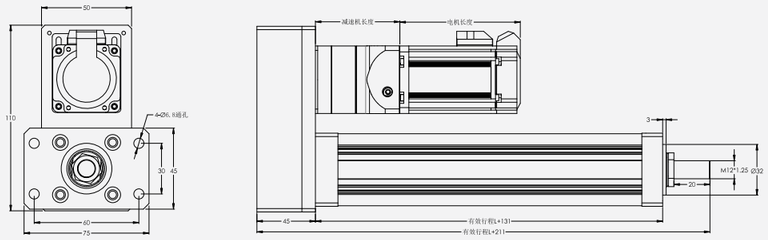

有效行程L(mm) Effective stroke	标准行程 Standard stroke										行程建议(mm) Itinerary suggestion
	100	200	300	400	500	600	700	800	900	1000	≧1000
重量(kg) Weight	2.25	2.60	2.95	3.30	3.65	4	4.35	4.70	5.05	5.40	...
备注：行程每增加100mm重量增加0.35kg Remarks: The weight of 0.35kg will be increased for every 100 mm increase in travel											

45缸直连式侧法兰
45Straight side flange

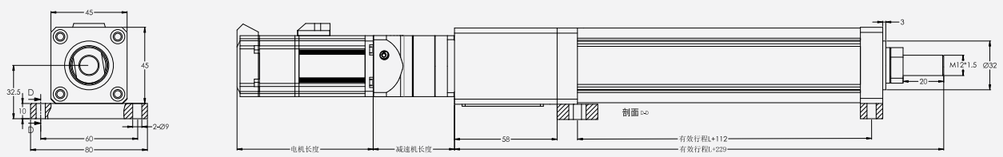

有效行程L(mm) Effective stroke	标准行程 Standard stroke										行程建议(mm) Itinerary suggestion
	100	200	300	400	500	600	700	800	900	1000	≧1000
重量(kg) Weight	2.25	2.60	2.95	3.30	3.65	4	4.35	4.70	5.05	5.40	...
备注：行程每增加100mm重量增加0.35kg Remarks: The weight of 0.35kg will be increased for every 100 mm increase in travel											

45缸直连式前法兰
45Straight front flange

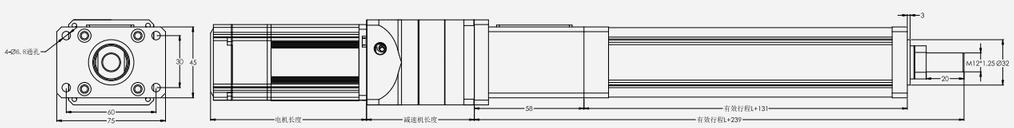

有效行程L(mm) Effective stroke	标准行程 Standard stroke										行程建议(mm) Itinerary suggestion
	100	200	300	400	500	600	700	800	900	1000	≧1000
重量(kg) Weight	2.25	2.60	2.95	3.30	3.65	4	4.35	4.70	5.05	5.40	...
备注：行程每增加100mm重量增加0.35kg Remarks: The weight of 0.35kg will be increased for every 100 mm increase in travel											

65缸内螺纹
65Internal thread

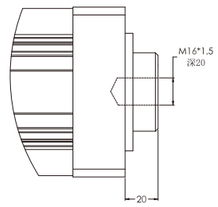

65缸外螺纹
65External thread

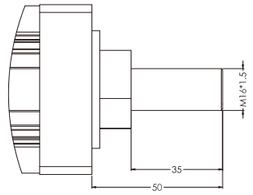

65缸Y型接头
65Y type joint

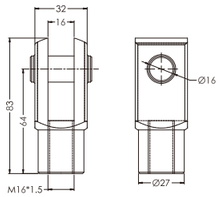

65缸关节轴承
65Joint bearing

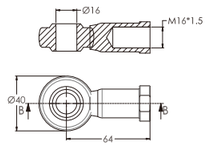

65缸前鱼眼后底座
65Folding front fisheye rear tailstock

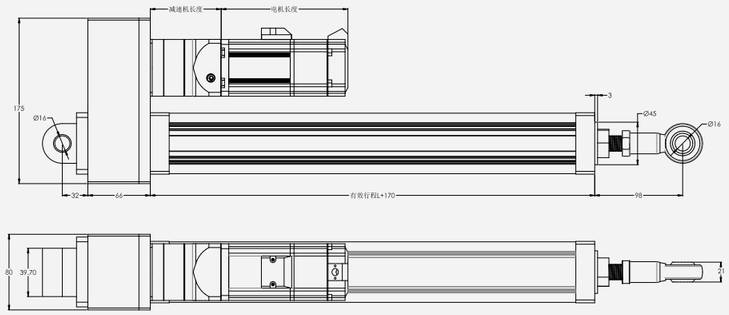

有效行程L(mm) Effective stroke	标准行程 Standard stroke										行程建议(mm) Itinerary suggestion
	100	200	300	400	500	600	700	800	900	1000	≧1000
重量(kg) Weight	6.40	7.15	7.90	8.65	9.40	10.15	10.90	11.65	12.40	13.15	...
备注：行程每增加100mm重量增加0.75kg Remarks: The weight of 0.75kg will be increased for every 100 mm increase in travel											

65缸折返式侧法兰
65Folding side flange

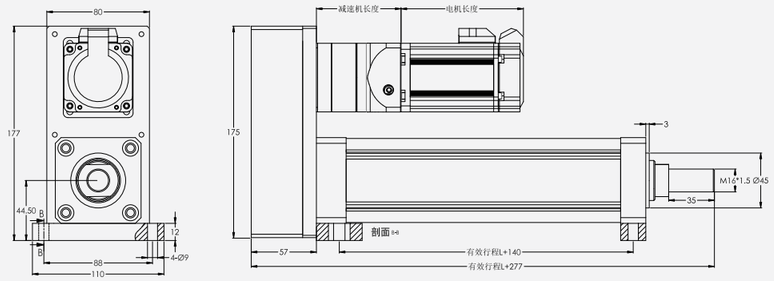

有效行程L(mm) Effective stroke	标准行程 Standard stroke										行程建议(mm) Itinerary suggestion
	100	200	300	400	500	600	700	800	900	1000	≧1000
重量(kg) Weight	6.40	7.15	7.90	8.65	9.40	10.15	10.90	11.65	12.40	13.15	...
备注：行程每增加100mm重量增加0.75kg Remarks: The weight of 0.75kg will be increased for every 100 mm increase in travel											

65缸折返式后法兰
65Folding rear flange

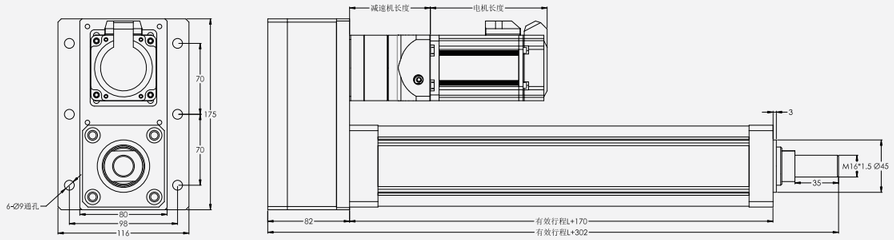

有效行程L(mm) Effective stroke	标准行程 Standard stroke										行程建议(mm) Itinerary suggestion
	100	200	300	400	500	600	700	800	900	1000	≦1000
重量(kg) Weight	6.40	7.15	7.90	8.65	9.40	10.15	10.90	11.65	12.40	13.15	...
备注：行程每增加100mm重量增加0.75kg Remarks: The weight of 0.75kg will be increased for every 100 mm increase in travel											

65缸直连式前法兰
65Straight front flange

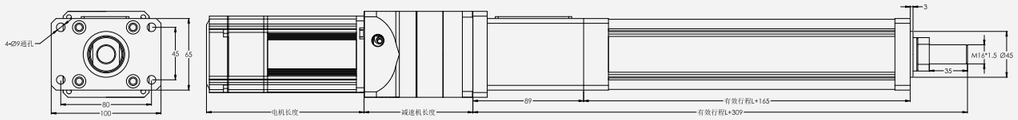

有效行程L(mm) Effective stroke	标准行程 Standard stroke										行程建议(mm) Itinerary suggestion
	100	200	300	400	500	600	700	800	900	1000	≦1000
重量(kg) Weight	6.40	7.15	7.90	8.65	9.40	10.15	10.90	11.65	12.40	13.15	...
备注：行程每增加100mm重量增加0.75kg Remarks: The weight of 0.75kg will be increased for every 100 mm increase in travel											

65缸折返式前法兰
65Folding front flange

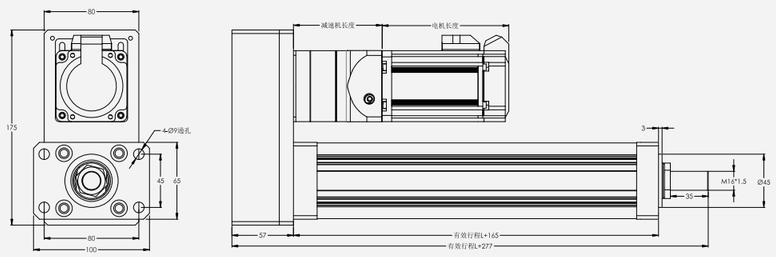

有效行程L(mm) Effective stroke	标准行程 Standard stroke										行程建议(mm) Itinerary suggestion
	100	200	300	400	500	600	700	800	900	1000	≦1000
重量(kg) Weight	6.40	7.15	7.90	8.65	9.40	10.15	10.90	11.65	12.40	13.15	...
备注：行程每增加100mm重量增加0.75kg Remarks: The weight of 0.75kg will be increased for every 100 mm increase in travel											

65折返前鱼眼中耳轴
65Folding front fisheye middle ear shaft

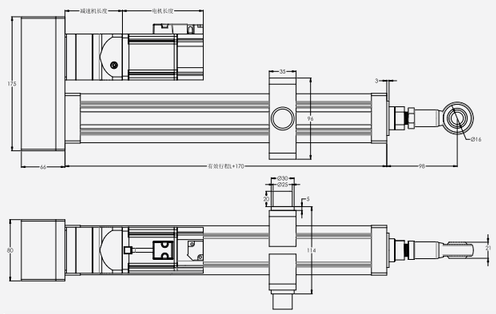

有效行程L(mm) Effective stroke	标准行程 Standard stroke										行程建议(mm) Itinerary suggestion
	100	200	300	400	500	600	700	800	900	1000	≦1000
重量(kg) Weight	6.40	7.15	7.90	8.65	9.40	10.15	10.90	11.65	12.40	13.15	...
备注：行程每增加100mm重量增加0.75kg Remarks: The weight of 0.75kg will be increased for every 100 mm increase in travel											

65缸直连式侧法兰
65Straight side flange

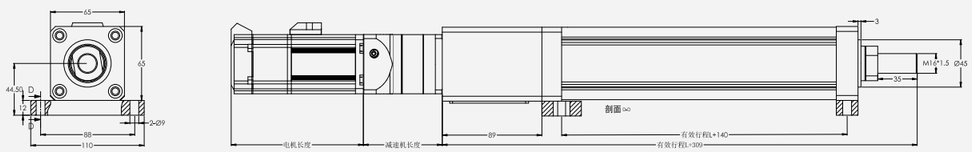

有效行程L(mm) Effective stroke	标准行程 Standard stroke										行程建议(mm) Itinerary suggestion
	100	200	300	400	500	600	700	800	900	1000	≦1000
重量(kg) Weight	6.40	7.15	7.90	8.65	9.40	10.15	10.90	11.65	12.40	13.15	...
备注：行程每增加100mm重量增加0.75kg Remarks: The weight of 0.75kg will be increased for every 100 mm increase in travel											

65折返式前鱼眼后耳轴
65Folding front fisheye rear trunnion

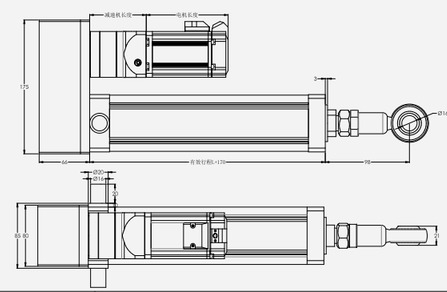

有效行程L(mm) Effective stroke	标准行程 Standard stroke										行程建议(mm) Itinerary suggestion
	100	200	300	400	500	600	700	800	900	1000	≦1000
重量(kg) Weight	6.40	7.15	7.90	8.65	9.40	10.15	10.90	11.65	12.40	13.15	...
备注：行程每增加100mm重量增加0.75kg Remarks: The weight of 0.75kg will be increased for every 100 mm increase in travel											

65直连前鱼眼中耳轴
65Direct connection front fisheye rear trunnion

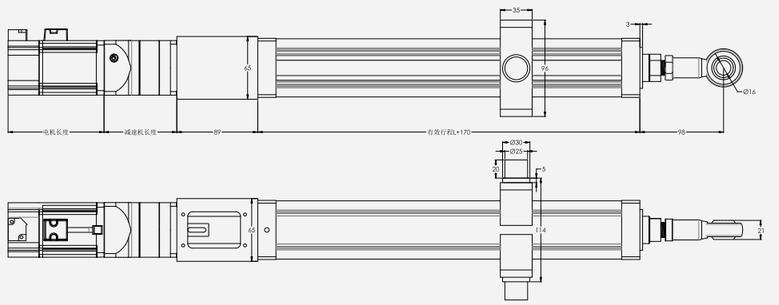

有效行程L(mm) Effective stroke	标准行程 Standard stroke										行程建议(mm) Itinerary suggestion
	100	200	300	400	500	600	700	800	900	1000	≦1000
重量(kg) Weight	6.40	7.15	7.90	8.65	9.40	10.15	10.90	11.65	12.40	13.15	...
备注：行程每增加100mm重量增加0.75kg Remarks: The weight of 0.75kg will be increased for every 100 mm increase in travel											

65直连前鱼眼后耳轴
65Direct connection front fisheye rear trunnion

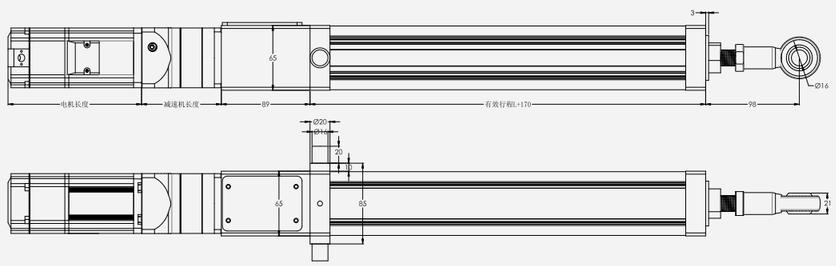

有效行程L(mm) Effective stroke	标准行程 Standard stroke										行程建议(mm) Itinerary suggestion
	100	200	300	400	500	600	700	800	900	1000	≦1000
重量(kg) Weight	6.40	7.15	7.90	8.65	9.40	10.15	10.90	11.65	12.40	13.15	...
备注：行程每增加100mm重量增加0.75kg Remarks: The weight of 0.75kg will be increased for every 100 mm increase in travel											

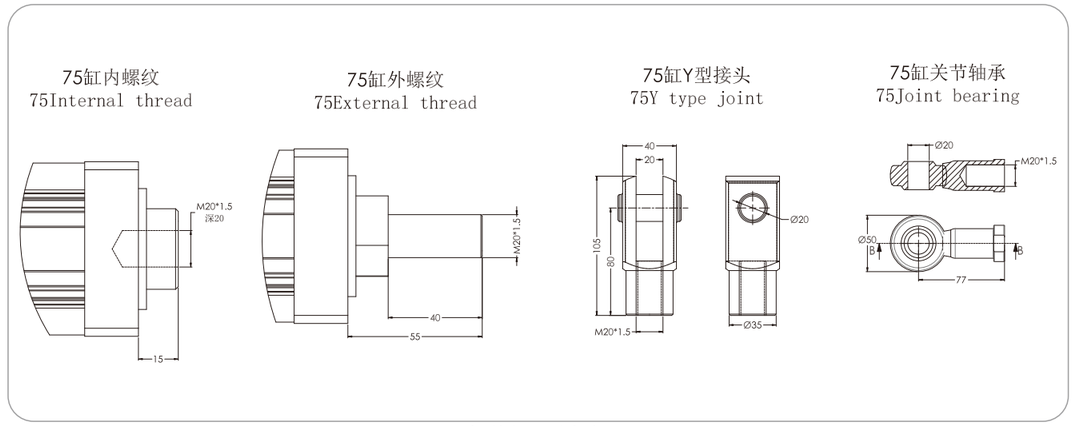

75缸前鱼眼后底座
75Folding front fisheye rear tailstock

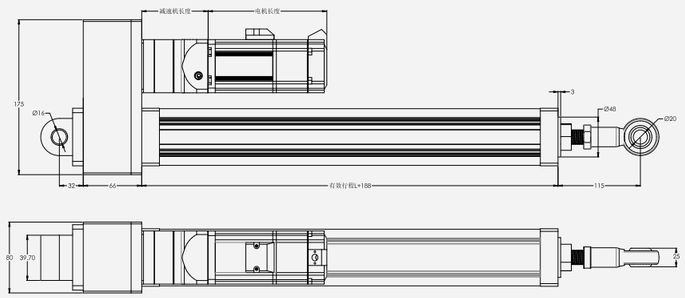

有效行程L(mm) Effective stroke	标准行程 Standard stroke										行程建议(mm) Itinerary suggestion
	100	200	300	400	500	600	700	800	900	1000	≦1000
重量(kg) Weight	8.50	9.45	10.40	11.35	12.30	13.25	14.20	15.15	16.10	17.05	...
备注：行程每增加100mm重量增加0.95kg Remarks: The weight of 0.95kg will be increased for every 100 mm increase in travel											

75缸折返式侧法兰
75Folding side flange

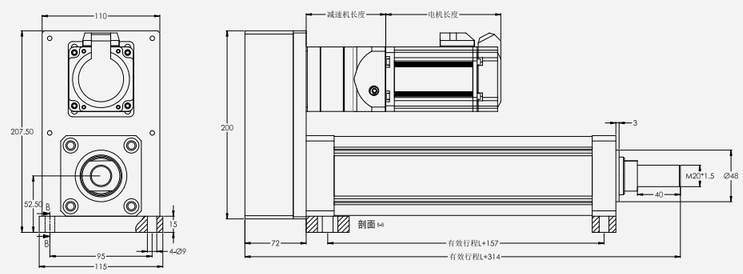

有效行程L(mm) Effective stroke	标准行程 Standard stroke										行程建议(mm) Itinerary suggestion
	100	200	300	400	500	600	700	800	900	1000	≦1000
重量(kg) Weight	7.80	8.75	9.70	10.65	11.60	12.55	13.50	14.45	15.40	16.35	...
备注：行程每增加100mm重量增加0.95kg Remarks: The weight of 0.95kg will be increased for every 100 mm increase in travel											

75缸折返式后法兰
75Folding rear flange

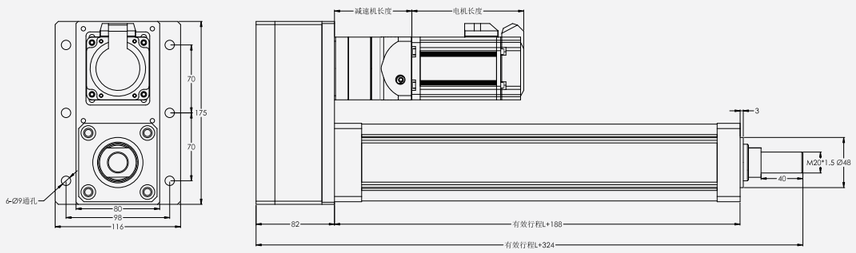

有效行程L(mm) Effective stroke	标准行程 Standard stroke										行程建议(mm) Itinerary suggestion
	100	200	300	400	500	600	700	800	900	1000	≦1000
重量(kg) Weight	8.50	9.45	10.40	11.35	12.30	13.25	14.20	15.15	16.10	17.05	...
备注：行程每增加100mm重量增加0.95kg Remarks: The weight of 0.95kg will be increased for every 100 mm increase in travel											

75缸直连式前法兰
75Straight front flange

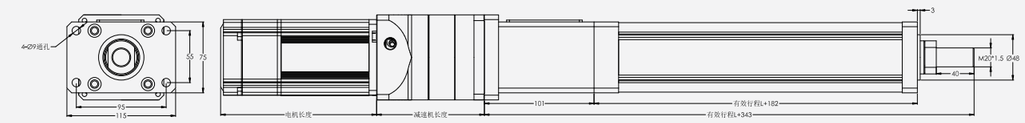

有效行程L(mm) Effective stroke	标准行程 Standard stroke										行程建议(mm) Itinerary suggestion
	100	200	300	400	500	600	700	800	900	1000	≦1000
重量(kg) Weight	7.80	8.75	9.70	10.65	11.60	12.55	13.50	14.45	15.40	16.35	...
备注：行程每增加100mm重量增加0.95kg Remarks: The weight of 0.95kg will be increased for every 100 mm increase in travel											

75缸折返式前法兰
75Folding front flange

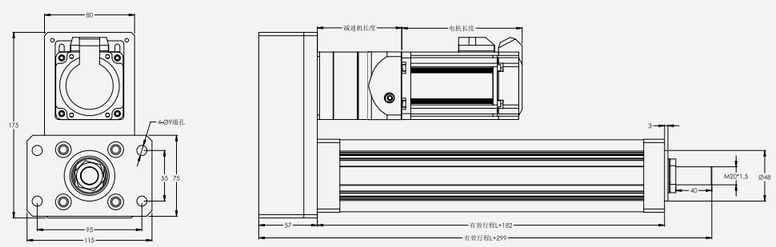

有效行程L(mm) Effective stroke	标准行程 Standard stroke										行程建议(mm) Itinerary suggestion
	100	200	300	400	500	600	700	800	900	1000	≦1000
重量(kg) Weight	7.80	8.75	9.70	10.65	11.60	12.55	13.50	14.45	15.40	16.35	...
备注：行程每增加100mm重量增加0.95kg Remarks: The weight of 0.95kg will be increased for every 100 mm increase in travel											

75折返前鱼眼中耳轴
75Folding front fisheye middle ear shaft

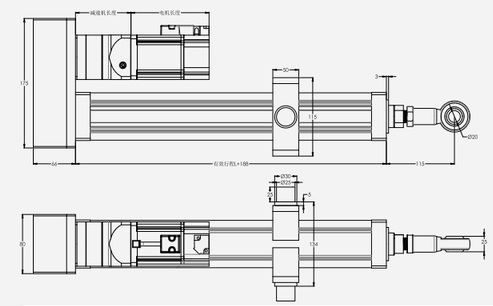

有效行程L(mm) Effective stroke	标准行程 Standard stroke										行程建议(mm) Itinerary suggestion
	100	200	300	400	500	600	700	800	900	1000	≦1000
重量(kg) Weight	8.50	9.45	10.40	11.35	12.30	13.25	14.20	15.15	16.10	17.05	...
备注：行程每增加100mm重量增加0.95kg Remarks: The weight of 0.95kg will be increased for every 100 mm increase in travel											

75缸直连式侧法兰
75Straight side flange

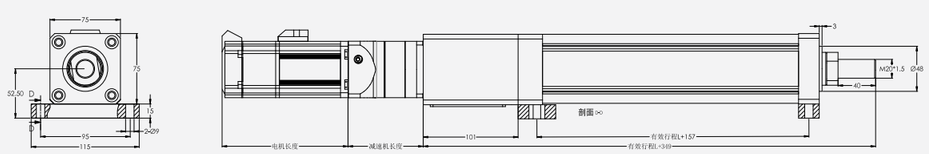

有效行程L(mm) Effective stroke	标准行程 Standard stroke										行程建议(mm) Itinerary suggestion
	100	200	300	400	500	600	700	800	900	1000	≦1000
重量(kg) Weight	7.80	8.75	9.70	10.65	11.60	12.55	13.50	14.45	15.40	16.35	...
备注：行程每增加100mm重量增加0.95kg Remarks: The weight of 0.95kg will be increased for every 100 mm increase in travel											

75折返式前鱼眼后耳轴
75Folding front fisheye rear trunnion

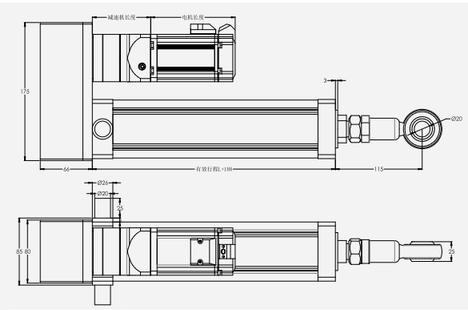

有效行程L(mm) Effective stroke	标准行程 Standard stroke										行程建议(mm) Itinerary suggestion
	100	200	300	400	500	600	700	800	900	1000	≦1000
重量(kg) Weight	7.80	8.75	9.70	10.65	11.60	12.55	13.50	14.45	15.40	16.35	...
备注：行程每增加100mm重量增加0.95kg Remarks: The weight of 0.95kg will be increased for every 100 mm increase in travel											

75直连前鱼眼中耳轴
75Direct connection front fisheye rear trunnion

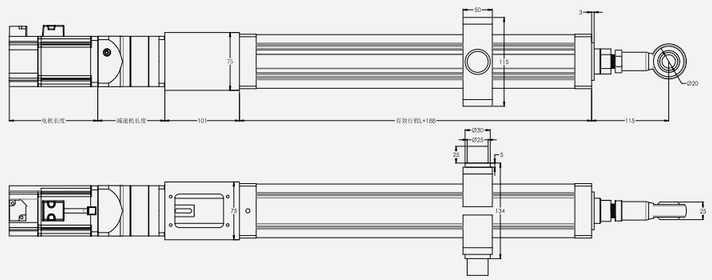

有效行程L(mm) Effective stroke	标准行程 Standard stroke										行程建议(mm) Itinerary suggestion
	100	200	300	400	500	600	700	800	900	1000	≧1000
重量(kg) Weight	8.50	9.45	10.40	11.35	12.30	13.25	14.20	15.15	16.10	17.05	...
备注：行程每增加100mm重量增加0.95kg Remarks: The weight of 0.95kg will be increased for every 100 mm increase in travel											

75直连前鱼眼后耳轴
75Direct connection front fisheye rear trunnion

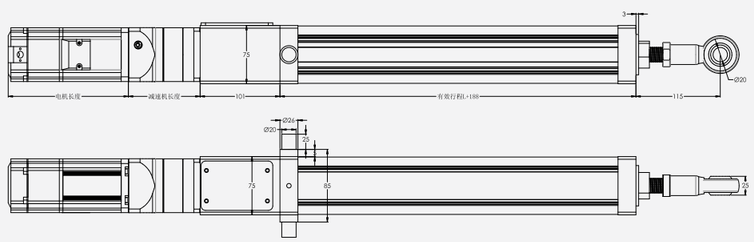

有效行程L(mm) Effective stroke	标准行程 Standard stroke										行程建议(mm) Itinerary suggestion
	100	200	300	400	500	600	700	800	900	1000	≧1000
重量(kg) Weight	7.80	8.75	9.70	10.65	11.60	12.55	13.50	14.45	15.40	16.35	...
备注：行程每增加100mm重量增加0.95kg Remarks: The weight of 0.95kg will be increased for every 100 mm increase in travel											

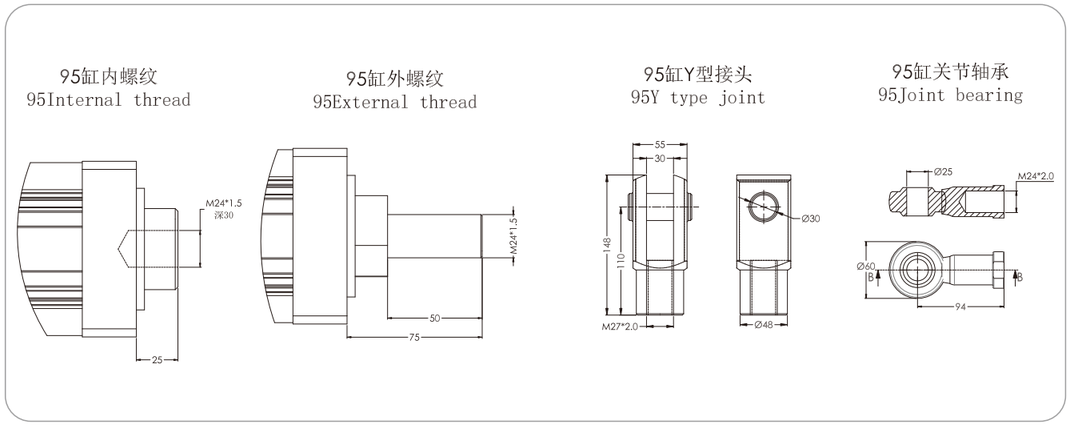

95缸前鱼眼后底座
95Folding front fisheye rear tailstock

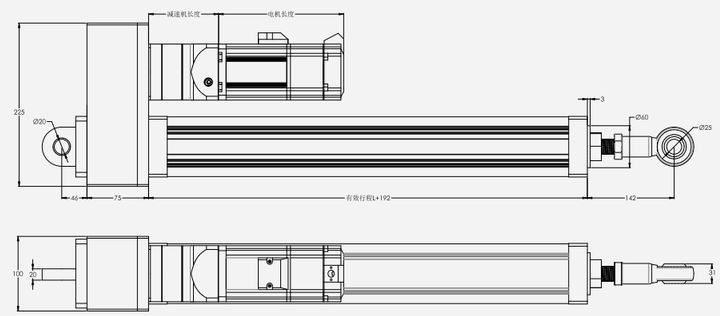

有效行程L(mm) Effective stroke	标准行程 Standard stroke										行程建议(mm) Itinerary suggestion
	100	200	300	400	500	600	700	800	900	1000	≧1500
重量(kg) Weight	16.00	17.50	19.00	20.50	22.00	23.50	25.00	26.50	28.00	29.50	...
备注：行程每增加100mm重量增加1.5kg Remarks: The weight of 1.5kg will be increased for every 100 mm increase in travel											

95缸折返式侧法兰
95Folding side flange

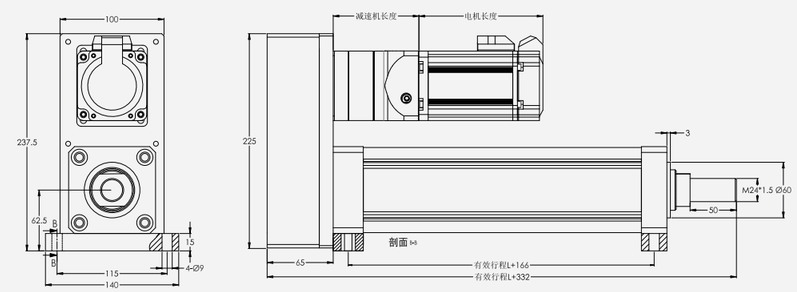

有效行程L(mm) Effective stroke	标准行程 Standard stroke										行程建议(mm) Itinerary suggestion
	100	200	300	400	500	600	700	800	900	1000	≧1500
重量(kg) Weight	14.00	15.50	17.00	18.50	20.00	21.50	23.00	24.50	26.00	27.50	...
备注：行程每增加100mm重量增加1.5kg Remarks: The weight of 1.5kg will be increased for every 100 mm increase in travel											

95缸折返式后法兰
95Folding rear flange

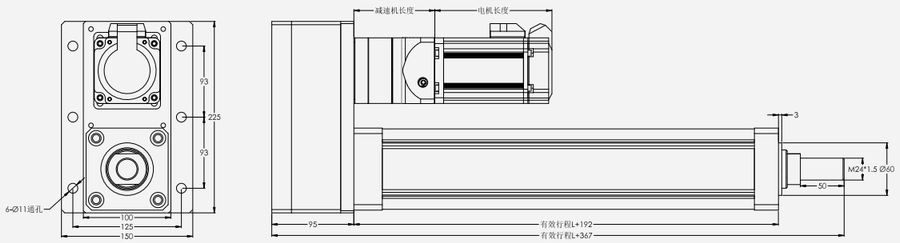

有效行程L(mm) Effective stroke	标准行程 Standard stroke										行程建议(mm) Itinerary suggestion
	100	200	300	400	500	600	700	800	900	1000	≦1500
重量(kg) Weight	16.00	17.50	19.00	20.50	22.00	23.50	25.00	26.50	28.00	29.50	...
备注：行程每增加100mm重量增加1.5kg Remarks: The weight of 1.5kg will be increased for every 100 mm increase in travel											

95缸折返式前法兰
95Folding front flange

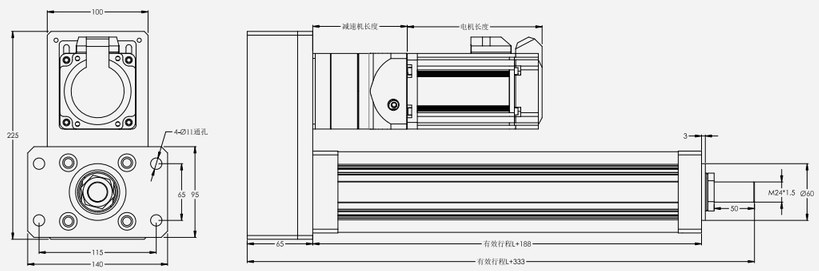

有效行程L(mm) Effective stroke	标准行程 Standard stroke										行程建议(mm) Itinerary suggestion
	100	200	300	400	500	600	700	800	900	1000	≦1500
重量(kg) Weight	14.00	15.50	17.00	18.50	20.00	21.50	23.00	24.50	26.00	27.50	...
备注：行程每增加100mm重量增加1.5kg Remarks: The weight of 1.5kg will be increased for every 100 mm increase in travel											

95缸直连式侧法兰
95Straight side flange

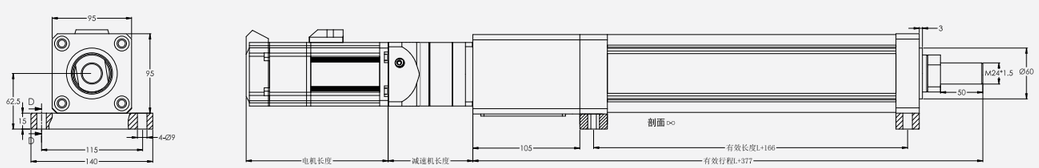

有效行程L(mm) Effective stroke	标准行程 Standard stroke										行程建议(mm) Itinerary suggestion
	100	200	300	400	500	600	700	800	900	1000	≦1500
重量(kg) Weight	14.00	15.50	17.00	18.50	20.00	21.50	23.00	24.50	26.00	27.50	...
备注：行程每增加100mm重量增加1.5kg Remarks: The weight of 1.5kg will be increased for every 100 mm increase in travel											

95缸直连式前法兰
95Straight front flange

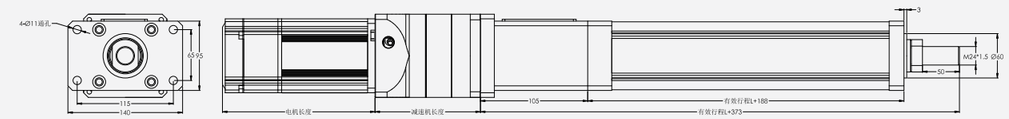

有效行程L(mm) Effective stroke	标准行程 Standard stroke										行程建议(mm) Itinerary suggestion
	100	200	300	400	500	600	700	800	900	1000	≦1500
重量(kg) Weight	14.00	15.50	17.00	18.50	20.00	21.50	23.00	24.50	26.00	27.50	...
备注：行程每增加100mm重量增加1.5kg Remarks: The weight of 1.5kg will be increased for every 100 mm increase in travel											

95折返前鱼眼中耳轴
95Folding front fisheye middle ear shaft

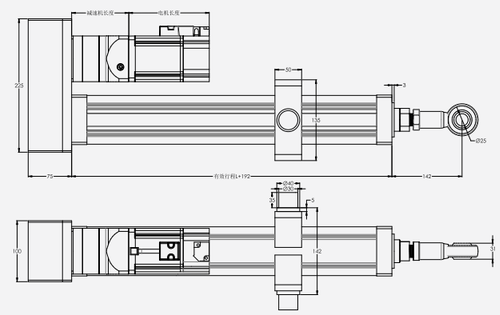

有效行程L(mm) Effective stroke	标准行程 Standard stroke										行程建议(mm) Itinerary suggestion
	100	200	300	400	500	600	700	800	900	1000	≦1500
重量(kg) Weight	16.00	17.50	19.00	20.50	22.00	23.50	25.00	26.50	28.00	29.50	...
备注：行程每增加100mm重量增加1.5kg Remarks: The weight of 1.5kg will be increased for every 100 mm increase in travel											

95折返式前鱼眼后耳轴
95Folding front fisheye rear trunnion

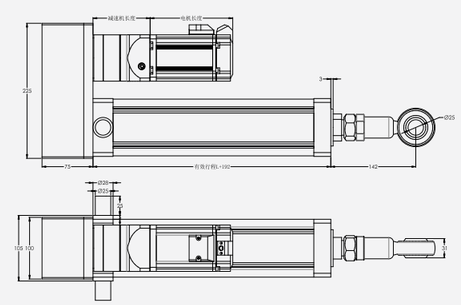

有效行程L(mm) Effective stroke	标准行程 Standard stroke										行程建议(mm) Itinerary suggestion
	100	200	300	400	500	600	700	800	900	1000	≦1500
重量(kg) Weight	14.00	15.50	17.00	18.50	20.00	21.50	23.00	24.50	26.00	27.50	...
备注：行程每增加100mm重量增加1.5kg Remarks: The weight of 1.5kg will be increased for every 100 mm increase in travel											

95直连前鱼眼中耳轴
95Direct connection front fisheye rear trunnion

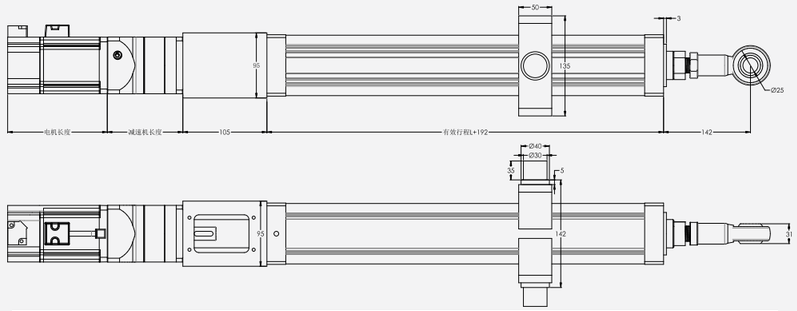

有效行程L(mm) Effective stroke	标准行程 Standard stroke										行程建议(mm) Itinerary suggestion
	100	200	300	400	500	600	700	800	900	1000	≦1500
重量(kg) Weight	16.00	17.50	19.00	20.50	22.00	23.50	25.00	26.50	28.00	29.50	...
备注：行程每增加100mm重量增加1.5kg Remarks: The weight of 1.5kg will be increased for every 100 mm increase in travel											

95直连前鱼眼后耳轴
95Direct connection front fisheye rear trunnion

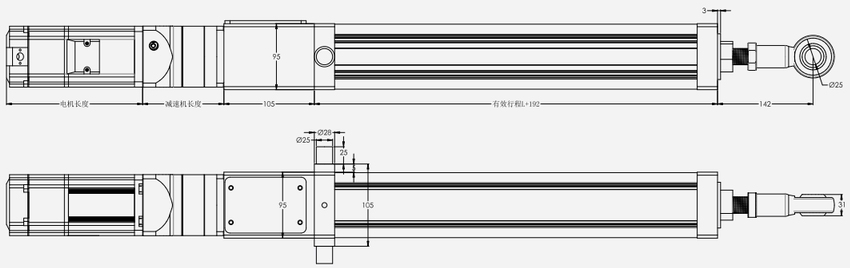

有效行程L(mm) Effective stroke	标准行程 Standard stroke										行程建议(mm) Itinerary suggestion
	100	200	300	400	500	600	700	800	900	1000	≦1500
重量(kg) Weight	14.00	15.50	17.00	18.50	20.00	21.50	23.00	24.50	26.00	27.50	...
备注：行程每增加100mm重量增加1.5kg Remarks: The weight of 1.5kg will be increased for every 100 mm increase in travel											

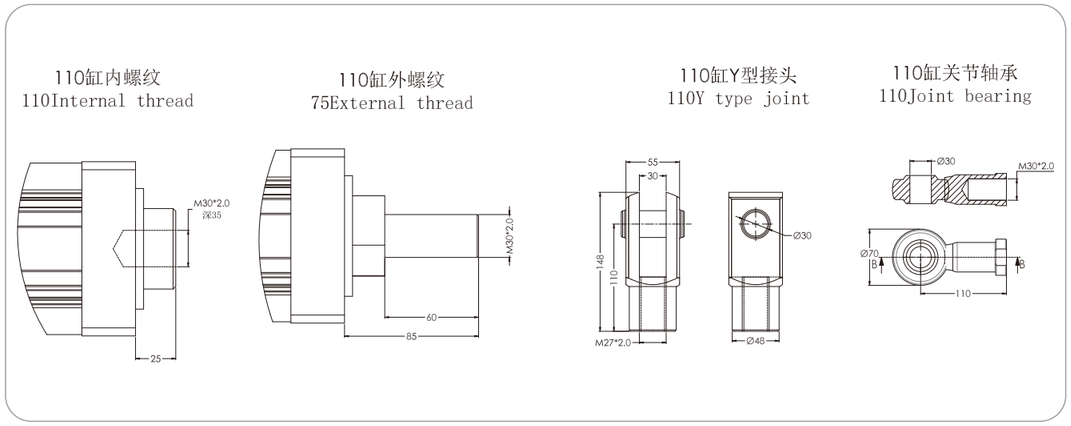

110缸前鱼眼后底座
110Folding front fisheye rear tailstock

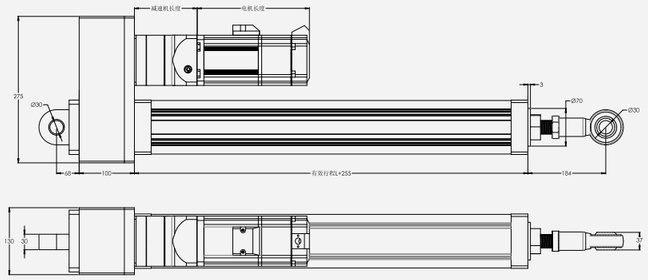

有效行程L(mm) Effective stroke	标准行程 Standard stroke										行程建议(mm) Itinerary suggestion
	100	200	300	400	500	600	700	800	900	1000	≦1500
重量(kg) Weight	41	42.80	44.60	46.40	48.20	50	51.80	53.60	55.40	57.20	...
备注：行程每增加100mm重量增加1.8kg Remarks: The weight of 1.8kg will be increased for every 100 mm increase in travel											

110缸折返式前法兰
110Folding front flange

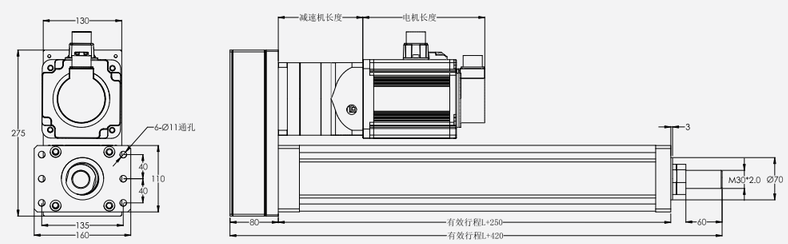

有效行程L(mm) Effective stroke	标准行程 Standard stroke										行程建议(mm) Itinerary suggestion
	100	200	300	400	500	600	700	800	900	1000	≦1500
重量(kg) Weight	37	38.80	40.60	42.40	44.20	46	47.80	49.60	51.40	53.20	...
备注：行程每增加100mm重量增加1.8kg Remarks: The weight of 1.8kg will be increased for every 100 mm increase in travel											

110缸折返式侧法兰
110Folding side flange

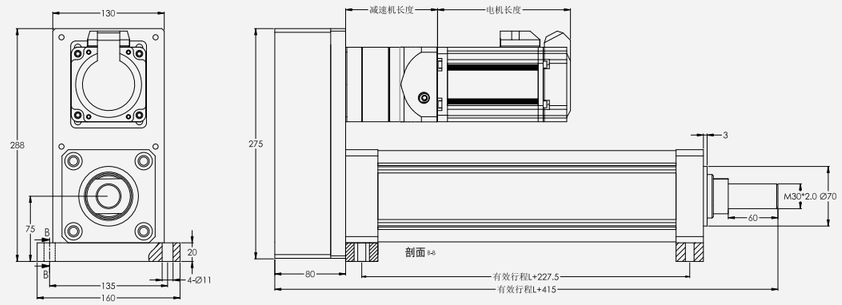

有效行程L(mm) Effective stroke	标准行程 Standard stroke										行程建议(mm) Itinerary suggestion
	100	200	300	400	500	600	700	800	900	1000	≦1500
重量(kg) Weight	37	38.80	40.60	42.40	44.20	46	47.80	49.60	51.40	53.20	...
备注：行程每增加100mm重量增加1.8kg Remarks: The weight of 1.8kg will be increased for every 100 mm increase in travel											

110缸直连式前法兰
110Straight front flange

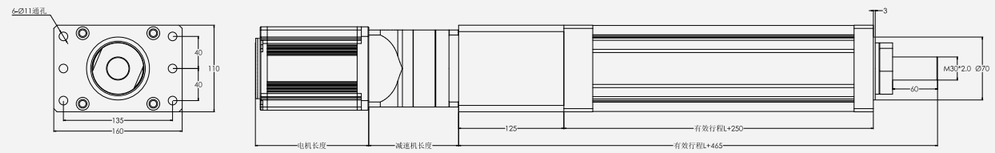

有效行程L(mm) Effective stroke	标准行程 Standard stroke										行程建议(mm) Itinerary suggestion
	100	200	300	400	500	600	700	800	900	1000	≦1500
重量(kg) Weight	37	38.80	40.60	42.40	44.20	46	47.80	49.60	51.40	53.20	...
备注：行程每增加100mm重量增加1.8kg Remarks: The weight of 1.8kg will be increased for every 100 mm increase in travel											

110缸折返式后法兰
110Folding rear flange

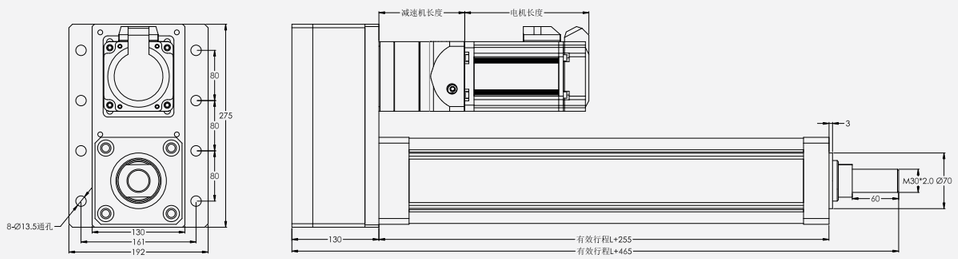

有效行程L(mm) Effective stroke	标准行程 Standard stroke										行程建议(mm) Itinerary suggestion
	100	200	300	400	500	600	700	800	900	1000	≦1500
重量(kg) Weight	41	42.80	44.60	46.40	48.20	50	51.80	53.60	55.40	57.20	...
备注：行程每增加100mm重量增加1.8kg Remarks: The weight of 1.8kg will be increased for every 100 mm increase in travel											

110折返前鱼眼中耳轴
110Folding front fisheye middle ear shaft

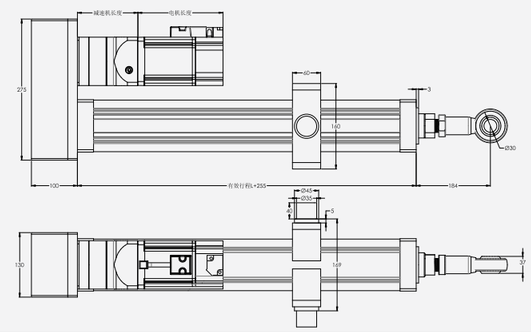

有效行程L(mm) Effective stroke	标准行程 Standard stroke										行程建议(mm) Itinerary suggestion
	100	200	300	400	500	600	700	800	900	1000	≦1500
重量(kg) Weight	41	42.80	44.60	46.40	48.20	50	51.80	53.60	55.40	57.20	...
备注：行程每增加100mm重量增加1.8kg Remarks: The weight of 1.8kg will be increased for every 100 mm increase in travel											

110缸直连式侧法兰
110Straight side flange

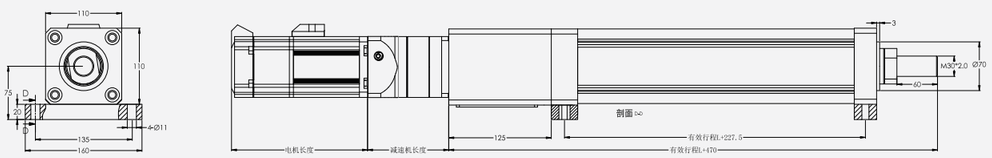

有效行程L(mm) Effective stroke	标准行程 Standard stroke										行程建议(mm) Itinerary suggestion
	100	200	300	400	500	600	700	800	900	1000	≦1500
重量(kg) Weight	37	38.80	40.60	42.40	44.20	46	47.80	49.60	51.40	53.20	...
备注：行程每增加100mm重量增加1.8kg Remarks: The weight of 1.8kg will be increased for every 100 mm increase in travel											

110折返式前鱼眼后耳轴
110Folding front fisheye rear trunnion

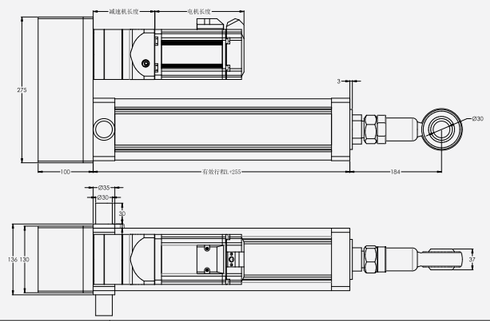

有效行程L(mm) Effective stroke	标准行程 Standard stroke										行程建议(mm) Itinerary suggestion
	100	200	300	400	500	600	700	800	900	1000	≦1500
重量(kg) Weight	37	38.80	40.60	42.40	44.20	46	47.80	49.60	51.40	53.20	...
备注：行程每增加100mm重量增加1.8kg Remarks: The weight of 1.8kg will be increased for every 100 mm increase in travel											

110直连前鱼眼中耳轴
110Direct connection front fisheye rear trunnion

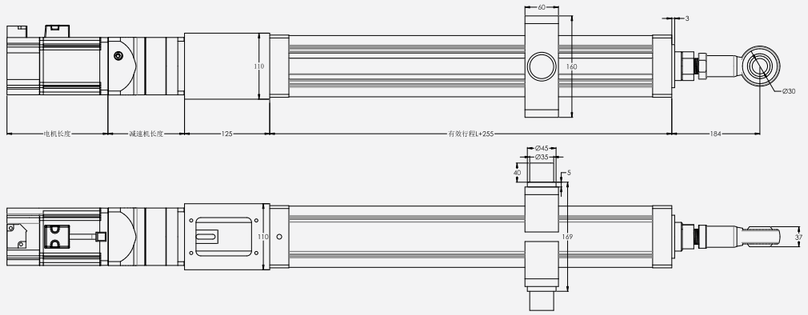

有效行程L(mm) Effective stroke	标准行程 Standard stroke										行程建议(mm) Itinerary suggestion
	100	200	300	400	500	600	700	800	900	1000	≦1500
重量(kg) Weight	41	42.80	44.60	46.40	48.20	50	51.80	53.60	55.40	57.20	...
备注：行程每增加100mm重量增加1.8kg Remarks: The weight of 1.8kg will be increased for every 100 mm increase in travel											

110直连前鱼眼后耳轴
110Direct connection front fisheye rear trunnion

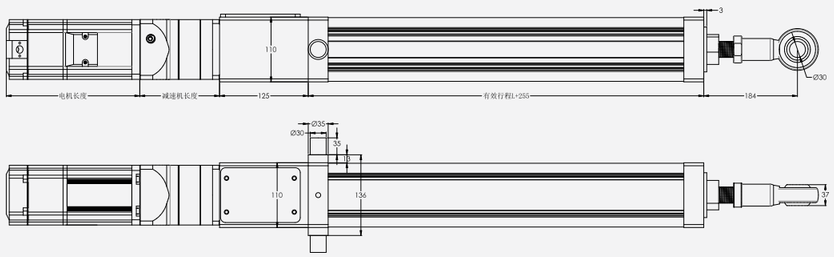

有效行程L(mm) Effective stroke	标准行程 Standard stroke										行程建议(mm) Itinerary suggestion
	100	200	300	400	500	600	700	800	900	1000	≦1500
重量(kg) Weight	37	38.80	40.60	42.40	44.20	46	47.80	49.60	51.40	53.20	...
备注：行程每增加100mm重量增加1.8kg Remarks: The weight of 1.8kg will be increased for every 100 mm increase in travel											

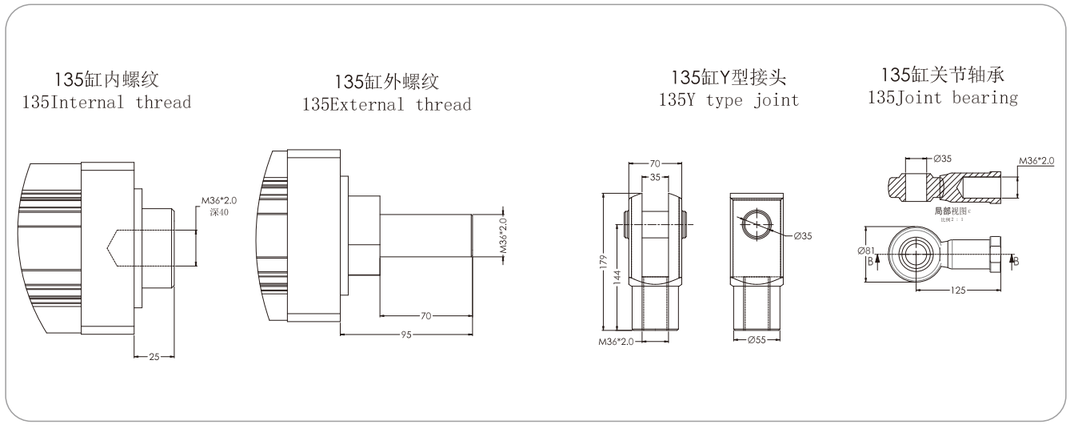

135缸前鱼眼后底座
135Folding front fisheye rear tailstock

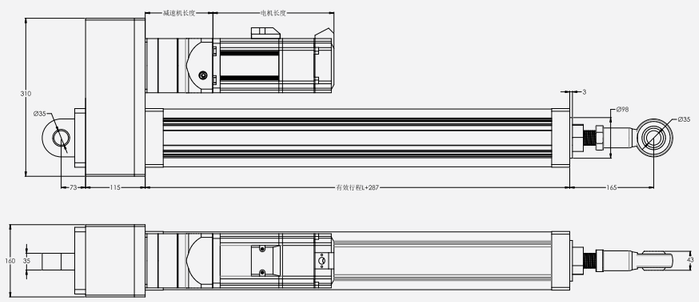

有效行程L(mm) Effective stroke	标准行程 Standard stroke										行程建议(mm) Itinerary suggestion
	100	200	300	400	500	600	700	800	900	1000	≦2000
重量(kg) Weight	51	54.50	58	61.50	65	68.50	72	75.50	79	82.50	...
备注：行程每增加100mm重量增加3.5kg Remarks: The weight of 3.5kg will be increased for every 100 mm increase in travel											

135缸折返式前法兰
135Folding front flange

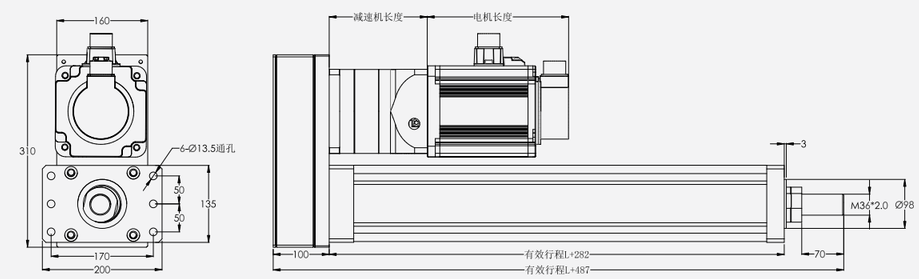

有效行程L(mm) Effective stroke	标准行程 Standard stroke										行程建议(mm) Itinerary suggestion
	100	200	300	400	500	600	700	800	900	1000	≦2000
重量(kg) Weight	46	49.50	53	56.50	60	63.50	67	70.50	74	77.50	...
备注：行程每增加100mm重量增加3.5kg Remarks: The weight of 3.5kg will be increased for every 100 mm increase in travel											

135缸折返式侧法兰
135Folding side flange

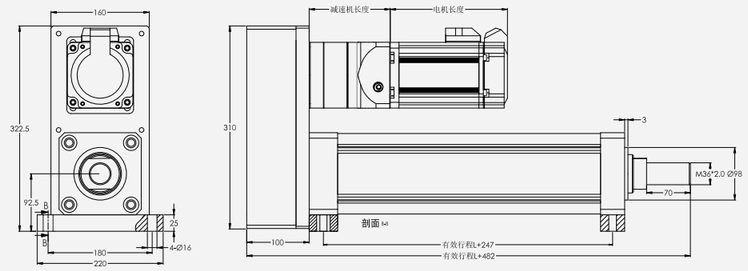

有效行程L(mm) Effective stroke	标准行程 Standard stroke										行程建议(mm) Itinerary suggestion
	100	200	300	400	500	600	700	800	900	1000	≦2000
重量(kg) Weight	46	49.50	53	56.50	60	63.50	67	70.50	74	77.50	...
备注：行程每增加100mm重量增加3.5kg Remarks: The weight of 3.5kg will be increased for every 100 mm increase in travel											

135缸直连式前法兰
135Straight front flange

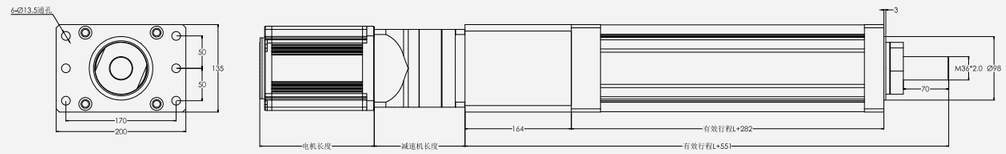

有效行程L(mm) Effective stroke	标准行程 Standard stroke										行程建议(mm) Itinerary suggestion
	100	200	300	400	500	600	700	800	900	1000	≦2000
重量(kg) Weight	46	49.50	53	56.50	60	63.50	67	70.50	74	77.50	...
备注：行程每增加100mm重量增加3.5kg Remarks: The weight of 3.5kg will be increased for every 100 mm increase in travel											

135缸折返式后法兰
135Folding rear flange

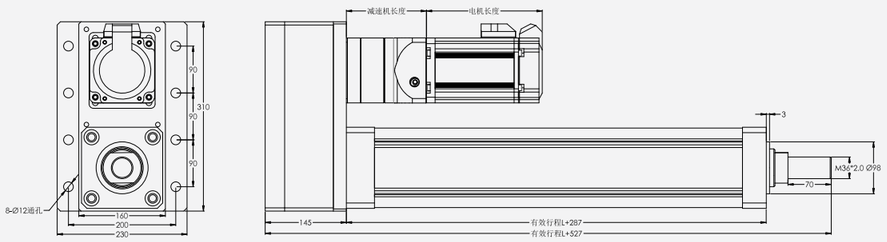

有效行程L(mm) Effective stroke	标准行程 Standard stroke										行程建议(mm) Itinerary suggestion
	100	200	300	400	500	600	700	800	900	1000	≦2000
重量(kg) Weight	51	54.50	58	61.50	65	68.50	72	75.50	79	82.50	...
备注：行程每增加100mm重量增加3.5kg Remarks: The weight of 3.5kg will be increased for every 100 mm increase in travel											

135折返前鱼眼中耳轴
135Folding front fisheye middle ear shaft

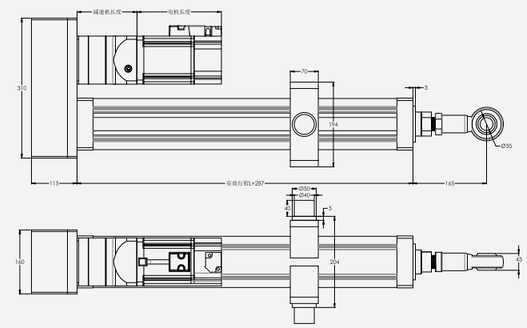

有效行程L(mm) Effective stroke	标准行程 Standard stroke										行程建议(mm) Itinerary suggestion
	100	200	300	400	500	600	700	800	900	1000	≦2000
重量(kg) Weight	51	54.50	58	61.50	65	68.50	72	75.50	79	82.50	...
备注：行程每增加100mm重量增加3.5kg Remarks: The weight of 3.5kg will be increased for every 100 mm increase in travel											

135缸直连式侧法兰
135Straight side flange

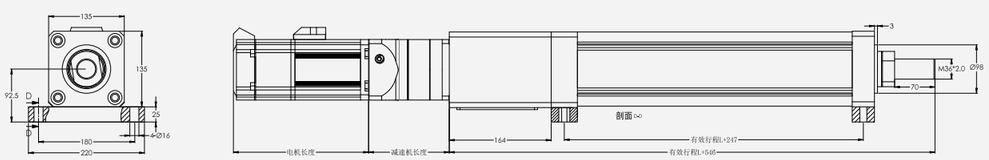

有效行程L(mm) Effective stroke	标准行程 Standard stroke										行程建议(mm) Itinerary suggestion
	100	200	300	400	500	600	700	800	900	1000	≦2000
重量(kg) Weight	46	49.50	53	56.50	60	63.50	67	70.50	74	77.50	...
备注：行程每增加100mm重量增加3.5kg Remarks: The weight of 3.5kg will be increased for every 100 mm increase in travel											

135折返式前鱼眼后耳轴
135Folding front fisheye rear trunnion

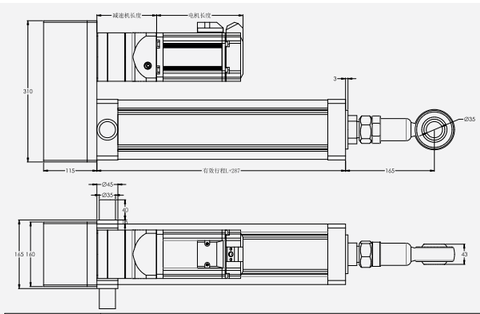

有效行程L(mm) Effective stroke	标准行程 Standard stroke										行程建议(mm) Itinerary suggestion
	100	200	300	400	500	600	700	800	900	1000	≦2000
重量(kg) Weight	46	49.50	53	56.50	60	63.50	67	70.50	74	77.50	...
备注：行程每增加100mm重量增加3.5kg Remarks: The weight of 3.5kg will be increased for every 100 mm increase in travel											

135直连前鱼眼中耳轴
135Direct connection front fisheye rear trunnion

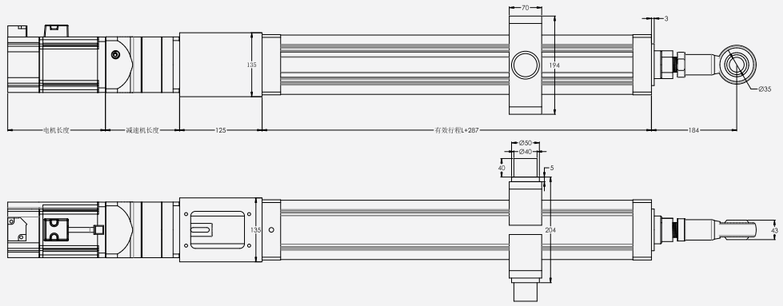

有效行程L(mm) Effective stroke	标准行程 Standard stroke										行程建议(mm) Itinerary suggestion
	100	200	300	400	500	600	700	800	900	1000	≤2000
重量(kg) Weight	51	54.50	58	61.50	65	68.50	72	75.50	79	82.50	...
备注：行程每增加100mm重量增加3.5kg Remarks: The weight of 3.5kg will be increased for every 100 mm increase in travel											

135直连前鱼眼后耳轴
135Direct connection front fisheye rear trunnion

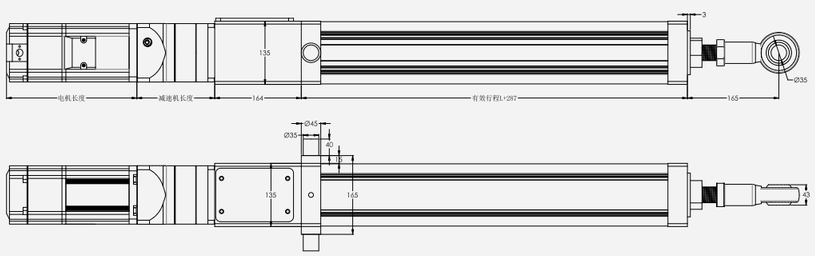

有效行程L(mm) Effective stroke	标准行程 Standard stroke										行程建议(mm) Itinerary suggestion
	100	200	300	400	500	600	700	800	900	1000	≤2000
重量(kg) Weight	46	49.50	53	56.50	60	63.50	67	70.50	74	77.50	...
备注：行程每增加100mm重量增加3.5kg Remarks: The weight of 3.5kg will be increased for every 100 mm increase in travel											

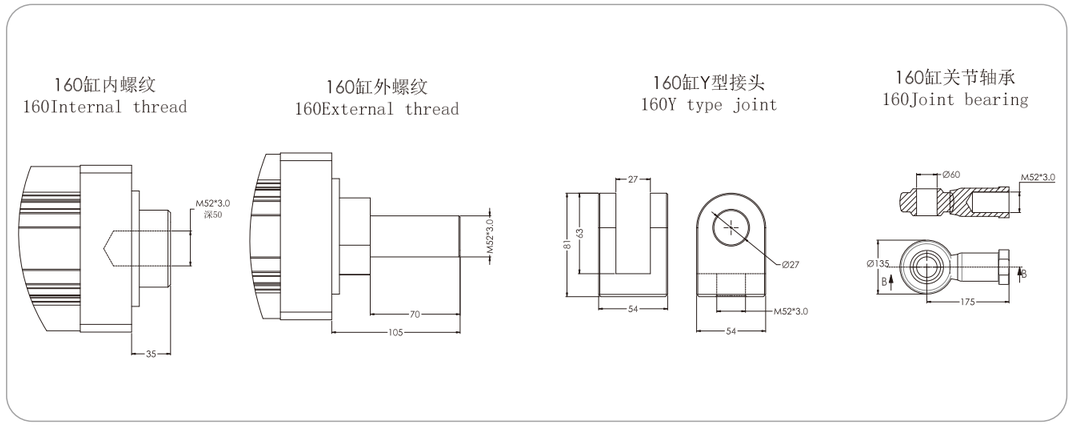

160缸折返式前法兰
160Folding front flange

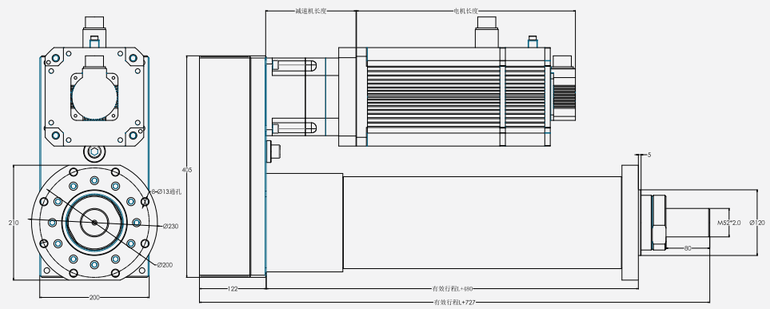

有效行程L(mm) Effective stroke											行程建议(mm) Itinerary suggestion
	100	200	300	400	500	600	700	800	900	1000	≤2000
重量(kg) Weight	117	125.50	134	142.50	151	159.50	168	176.50	185	193.50	...
备注：行程每增加100mm重量增加8.5kg Remarks: The weight of 8.5kg will be increased for every 100 mm increase in travel											

160缸折返式后法兰
160Folding rear flange

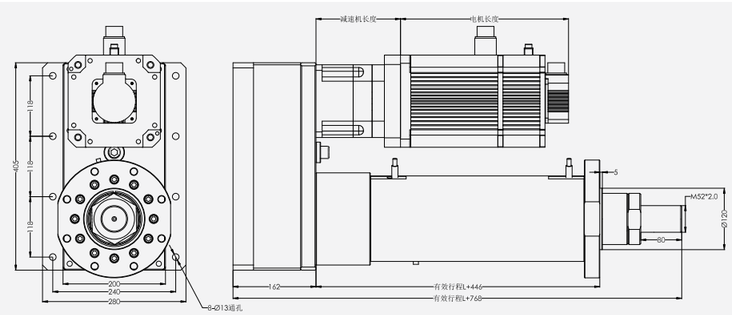

有效行程L(mm) Effective stroke											行程建议(mm) Itinerary suggestion
	100	200	300	400	500	600	700	800	900	1000	≤2000
重量(kg) Weight	124	132.50	141	149.50	158	166.50	175	183.50	192	200.50	...
备注：行程每增加100mm重量增加8.5kg Remarks: The weight of 8.5kg will be increased for every 100 mm increase in travel											

160缸折返式前法兰
160Straight front flange

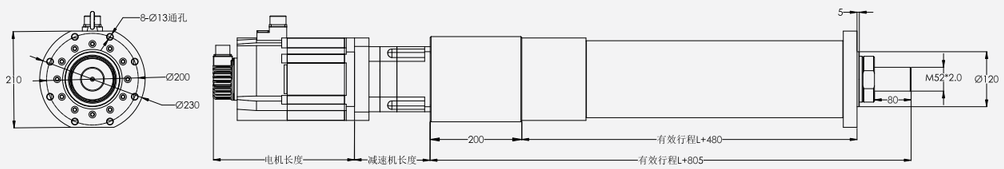

有效行程L(mm) Effective stroke											行程建议(mm) Itinerary suggestion
	100	200	300	400	500	600	700	800	900	1000	≦2000
重量(kg) Weight	117	125.50	134	142.50	151	159.50	168	176.50	185	193.50	...
备注：行程每增加100mm重量增加8.5kg Remarks: The weight of 8.5kg will be increased for every 100 mm increase in travel											

160前鱼眼后尾座
160Folding front fisheye rear tailstock

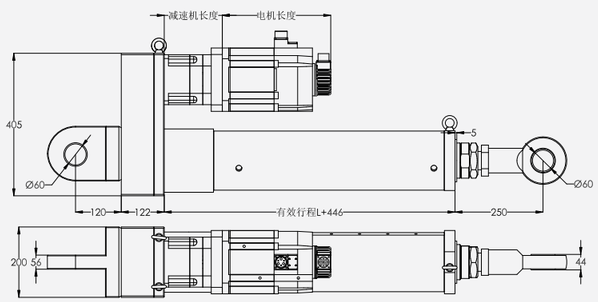

有效行程L(mm) Effective stroke											行程建议(mm) Itinerary suggestion
	100	200	300	400	500	600	700	800	900	1000	≦2000
重量(kg) Weight	124	132.50	141	149.50	158	166.50	175	183.50	192	200.50	...
备注：行程每增加100mm重量增加8.5kg Remarks: The weight of 8.5kg will be increased for every 100 mm increase in travel											

160折返式前鱼眼后耳轴
160Folding front fisheye rear trunnion

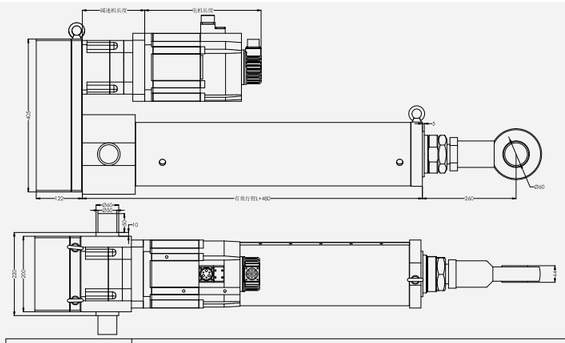

有效行程L(mm) Effective stroke											行程建议(mm) Itinerary suggestion
	100	200	300	400	500	600	700	800	900	1000	≦2000
重量(kg) Weight	117	125.50	134	142.50	151	159.50	168	176.50	185	193.50	...
备注：行程每增加100mm重量增加8.5kg Remarks: The weight of 8.5kg will be increased for every 100 mm increase in travel											

160直连式前鱼眼后耳轴
160Direct connection front fisheye rear trunnion

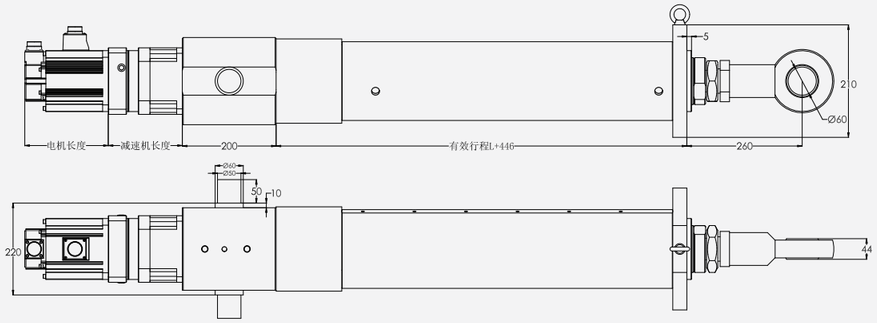

有效行程L(mm) Effective stroke											行程建议(mm) Itinerary suggestion
	100	200	300	400	500	600	700	800	900	1000	≦2000
重量(kg) Weight	117	125.50	134	142.50	151	159.50	168	176.50	185	193.50	...
备注：行程每增加100mm重量增加8.5kg Remarks: The weight of 8.5kg will be increased for every 100 mm increase in travel											

190折返式后法兰
190Folding rear flange

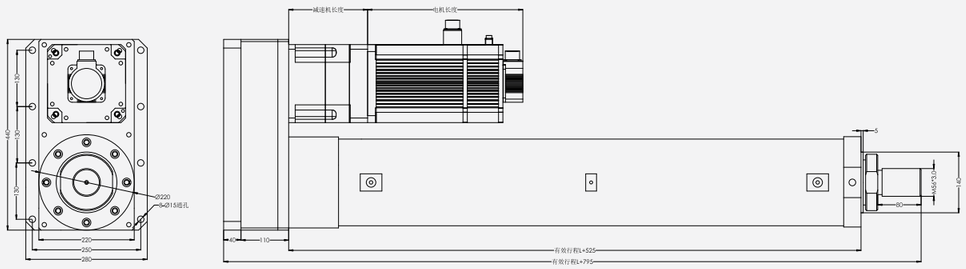

有效行程L(mm) Effective stroke	标准行程 Standard stroke										行程建议(mm) Itinerary suggestion
	100	200	300	400	500	600	700	800	900	1000	≦2500
重量(kg) Weight	295	310	325	340	355	370	385	400	415	430	...
备注：行程每增加100mm重量增加15kg Remarks: The weight of 15kg will be increased for every 100 mm increase in travel											

190缸折返式前法兰
190Folding front flange

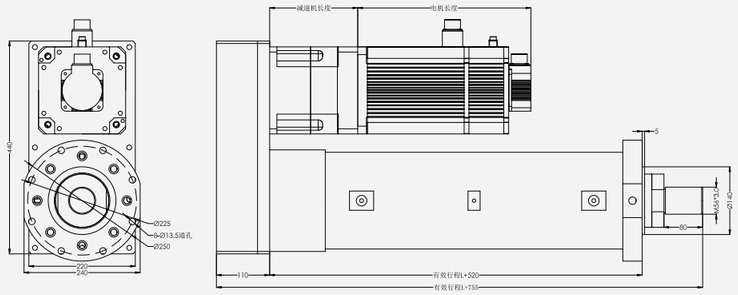

有效行程L(mm) Effective stroke	标准行程 Standard stroke										行程建议(mm) Itinerary suggestion
	100	200	300	400	500	600	700	800	900	1000	≦2500
重量(kg) Weight	280	295	310	325	340	355	370	385	400	415	...
备注：行程每增加100mm重量增加15kg Remarks: The weight of 15kg will be increased for every 100 mm increase in travel											

190折返式前鱼眼后耳轴
190Folding front fisheye rear trunnion

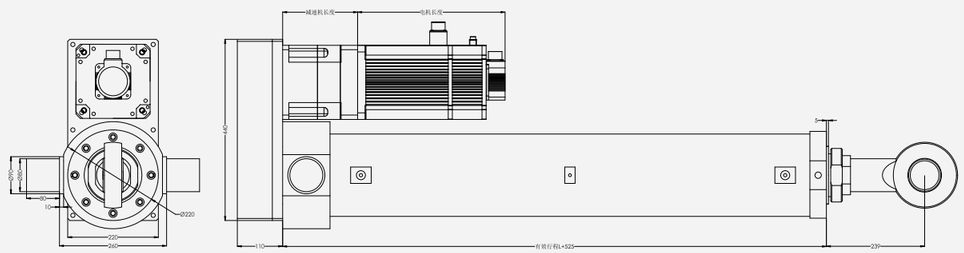

有效行程L(mm) Effective stroke	标准行程 Standard stroke										行程建议(mm) Itinerary suggestion
	100	200	300	400	500	600	700	800	900	1000	≦2500
重量(kg) Weight	280	295	310	325	340	355	370	385	400	415	...
备注：行程每增加100mm重量增加15kg Remarks: The weight of 15kg will be increased for every 100 mm increase in travel											

190直连式前法兰
190Straight front flange

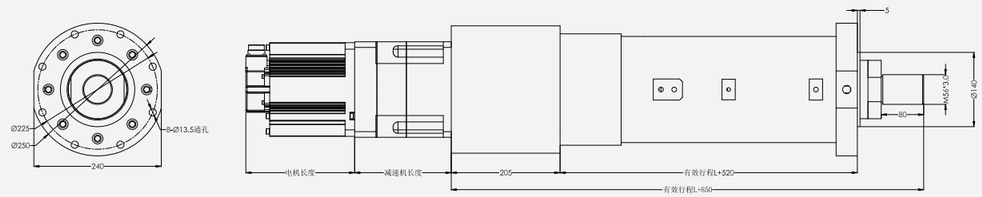

有效行程L(mm) Effective stroke	标准行程 Standard stroke										行程建议(mm) Itinerary suggestion
	100	200	300	400	500	600	700	800	900	1000	≦2500
重量(kg) Weight	280	295	310	325	340	355	370	385	400	415	...
备注：行程每增加100mm重量增加15kg Remarks: The weight of 15kg will be increased for every 100 mm increase in travel											

190直连式前鱼眼后耳轴
190Direct connection front fisheye rear trunnion

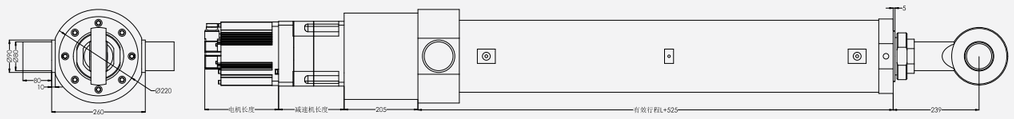

有效行程L(mm) Effective stroke	标准行程 Standard stroke										行程建议(mm) Itinerary suggestion
	100	200	300	400	500	600	700	800	900	1000	≦2500
重量(kg) Weight	280	295	310	325	340	355	370	385	400	415	...
备注：行程每增加100mm重量增加15kg Remarks: The weight of 15kg will be increased for every 100 mm increase in travel											

尺寸参考表

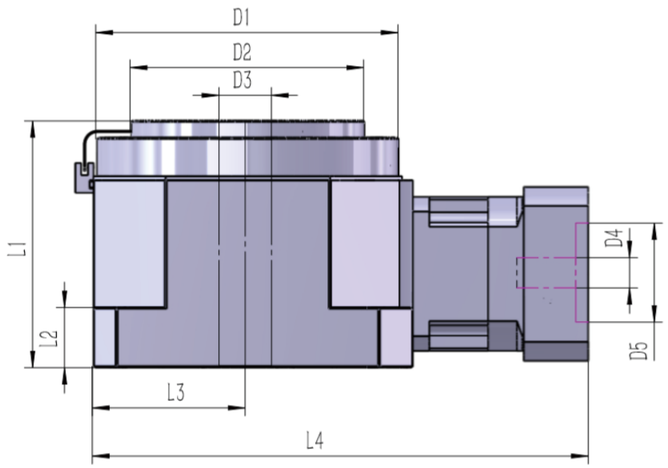

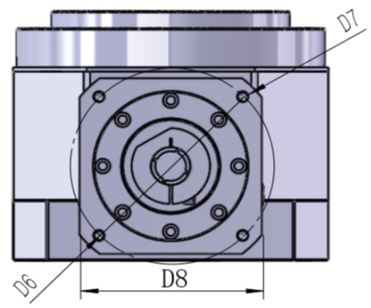

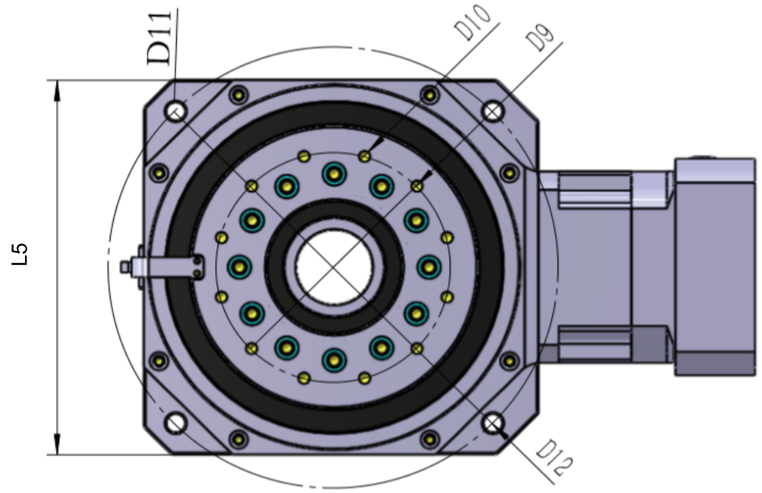

	型号规格	ZHN40	ZHN60	ZHN80	ZHN120	ZHN160	ZHN250	减速比
	负载重量（KG）	15	45	90	230	900	3800	
D1	凸台直径	98	125	172	220	250	558	
D2	转盘直径	75	95	130	170	200	480	
D3	穿线孔径	15	20	50	45	70	260	
D4	电机轴孔径	8	11/14	19	22/24	35	35	
D5	电机凸台直径	30	50	70	110	114. 3	114. 3	
D6	电机螺纹孔分度圆	45/46	45/46	90	145	200	200	
D7	电机螺孔规格	M4	M4/M5	M5/M6	M8	M12	M12	
D8	电机法兰宽度	40/42	60	80	115/130	180	180	
D9	转盘螺孔分度圆	59	75	106	138	160	430	
D10	转盘螺纹孔	8-M4	8-M5	10-M6	12-M8	12-M10	24-M12	
D11	平台底座螺孔（通孔）	4-φ5. 5	4-φ6.6	4-φ9.0	4-φ11	4-φ13	4-φ22	
D12	平台底座螺孔分度圆	124. 5	150	206	265	300	650	
L1	平台高度	82	98.5	135	184.5	242.5	287	
L2	平台底座厚度	20	25	30	45	60	70	
L3	转盘中心距离	52. 5	65	90	112.5	130	280	
L4	平台总长	191	213	318	361	484	802	一级
								二级
								三级
L5	平台宽度	105	130	180	233	260	560	

註：電機接口可根據不同電機，做相應連接尺寸。

技术参数

產品型號	ZHN40	ZHN60	ZHN80	ZHN120	ZHN160	ZHN250	減速比	級數
額定輸出扭矩 (Nm)	24	54	120	375	1200	3150	9	1级
	54	120	330	780	2400	5340	12	
	48	108	270	690	2100	4800	15	
	15	45	150	360	1350	2850	21	
	24	54	120	375	1200	3150	30	2级
	54	120	330	780	2400	5340	36	
	48	108	270	690	2100	4800	45	
	54	120	330	780	2400	5340	48	
	54	120	330	780	2400	3000	60	
	48	108	270	690	2100	5340	75	
	54	120	330	780	2400	4800	84	
	48	108	270	690	2100	4800	105	
	15	45	150	360	1350	3000	120	
	54	120	330	780	2400	5340	150	3级
	54	120	330	780	2400	5340	210	
	54	120	330	780	2400	5340	300	
	48	108	270	690	2100	5340	360	
	54	120	330	360	2400	5340	480	
	48	108	270	690	2100	4800	600	
	54	120	330	780	2400	5340	768	
	48	108	270	690	2100	4800	960	
	15	45	150	360	1350	3000	1536	
故障停止扭矩	2倍額定输出扭矩							
產品型號	ZHN40	ZHN60	ZHN80	ZHN120	ZHN160	ZHN250	級數	
最大徑向力 (N)	5800	6700	11000	16300	26700	116000	/	
最大軸向力 (N)	5800	6700	11000	16300	26700	116000	/	
負載重量 (kg)	15	45	90	230	900	3800	/	
最大傾覆力矩 (Nm)	435	636	1430	2771	5340	55680	/	
滿載效率 (%)	96						1级	
	94						2级	
	90						3级	
平均壽命 (h)	20000							
重量 (kg)	2.2	4.4	11	21.4	41.8	282	1级	
	2.3	4.6	11.3	23.3	46.8	326.5	2级	
	2.4	4.8	11.8	25.3	51.8	360.5	3级	

技术参数

產品型號		ZHN40	ZHN60	ZHN80	ZHN120	ZHN160	ZHN250	減速比
轉動慣量 (kgcm2)		0.033	0.147	0.839	2.864	13.219	79.314	9
		0.023	0.097	0.542	1.864	8.101	48.606	12
		0.02	0.079	0.459	1.559	6.187	37.122	15
		0.017	0.065	0.388	1.314	4.608	27.648	21
		0.029	0.13	0.734	2.599	12.044	72.264	30
		0.028	0.125	0.711	2.526	12.207	73.242	36
		0.023	0.075	0.699	2.49	12.157	72.942	45
		0.022	0.086	0.492	1.722	7.349	44.094	48
		0.019	0.074	0.432	1.474	6.534	39.204	60
		0.019	0.074	0.432	1.462	5.703	34.218	75
		0.017	0.063	0.382	1.275	6.239	37.434	84
		0.016	0.063	0.382	1.275	5.177	31.062	105
		0.016	0.063	0.382	1.274	4.411	26.466	120
		0.028	0.074	0.5	2.52	7.352	44.112	150
		0.019	0.074	0.49	1.47	7.351	44.106	210
		0.019	0.074	0.431	1.46	7.253	43.518	300
		0.028	0.063	0.686	2.45	7.155	42.93	360
		0.016	0.063	0.382	1.274	6.37	38.22	480
		0.016	0.063	0.382	1.274	6.076	36.456	600
		0.016	0.063	0.382	1.274	5.586	33.516	768
		0.016	0.063	0.382	1.274	5.292	31.752	960
		0.016	0.063	0.382	1.274	5.096	30.576	1536
回程間隙 (arcmin)		≤0.5 弧分	≤0.5 弧分	≤0.5 弧分	≤0.5 弧分	≤0.5 弧分	≤1 弧分	1 級
		≤1 弧分	≤1 弧分	≤1 弧分	≤1 弧分	≤1 弧分	≤2 弧分	2 級
		≤2 弧分	≤2 弧分	≤2 弧分	≤2 弧分	≤2 弧分	≤5 弧分	3 級
轉盤跳動	中心跳動	0.002	0.002	0.002	0.002	0.002	0.002	/
	端跳動	0.01	0.01	0.01	0.01	0.015	0.03	
	徑向跳動	0.01	0.01	0.01	0.01	0.015	0.03	
抗扭剛性 (Nm/arcmin)		0.7	1.8	4.4	9.2	26.7	58	/
噪音 (dB)		55	58	60	65	70	80	
額定輸入轉速 (r/min)		3000	3000	3000	3000	3000	3000	
額定輸出轉速 (r/min)		300	300	300	300	300	300	